WASTE STORAGE PROVISION REQUIREMENTS FOR NEW RESIDENTIAL DEVELOPMENTS

HERTSMERE

PLANNING FOR GROWTH
DEVELOPMENT MANAGEMENT
HERTSMERE

WASTE STORAGE PROVISION REQUIREMENTS FOR NEW RESIDENTIAL DEVELOPMENTS

Introduction

The following guidance has been provided by Hertsmere Borough Council to set out the requirements for waste and recycling storage and collections at all new residential developments. This guidance applies to new buildings and refurbishments or conversions of existing residential and non-residential buildings. These guidelines do not cover the requirements for managing construction and industrial waste.

This guidance has been produced in consultations between Hertsmere Borough Council's Planning and Economic Development Service and Waste Management unit. The guidance is intended to supplement that already set out within Policies SP1, CS16 from the Hertsmere Borough Council: Local Plan Core Strategy, Policy SADM19 from the Hertsmere Local Plan Site Allocations, and Development Management Policies Plan and any other future relevant policies contained within the Council's emerging Local Plan. There are further conditions as set out within Part D of the Council's Planning and Design Guide Supplementary Planning Document (SPD), Architects and developers should also refer to Approved Document H - Drainage and Waste Disposal (2015 edition), and Waste management in buildings — Code of practice British Standards EN BS 5906:2005.

General Principles

It is essential that suitable waste management facilities are provided for domestic waste in order to minimise environmental health risks. All designs of such facilities must take into account storage space, accessibility for residents and collection operatives, and health and safety for all parties.

The document includes both requirements, which are necessary for the purposes of waste and recycling storage and collections without posing health and safety risks to operatives or members of the public, and recommendations, which should be considered for ease of use of the disposal system for the residents.

Planning applications submitted for consideration to Hertsmere Borough Council should demonstrate clearly how all requirements have been fully satisfied. A completed waste management questionnaire to support your application will be required as part of all applications.

Hertsmere Borough Council may contact the applicant if guidance has not been followed or if further consultation is needed, and will provide advice in relation to the application if requested.

Please note that the agreed waste storage provision requirements must be fully completed prior to occupancy of the development.

In order to ensure all containers adhere to Hertsmere's regulations for manufacturing quality, branding, labelling and safety standards, all waste and recycling containers must be purchased directly from Hertsmere Borough Council. It is the responsibility of the developer to ensure that all containers are purchased prior to occupancy of the development. For the latest indicative container price for bin purchases see our fees and charges. For the terms and conditions for the purchase of containers please see Appendix D.

Submitting Planning Applications

When a planning application is submitted, Hertsmere Borough Council will expect details of the proposed storage accommodation for waste and recyclable material to be specified and agreed. A completed supporting waste management questionnaire must be submitted to demonstrate full adherence to the requirements and consideration of recommendations.

In larger developments the Council may require a waste management plan to be submitted. This should indicate:

- The size and location of waste and recycling stores, and how the waste will be delivered to these facilities.
- The size and quantity of containers for waste.
- Any proposed separate collection point, and the method for transferring waste to this location.

Architects and developers are encouraged to consult with the Council's Waste Management department at the earliest opportunity in the design process to ensure that proposals for waste storage and collection meet the necessary requirements.

Developers of mixed-use or commercial sites may also need to consult with other waste collection providers to ensure that their requirements are met.

Section 1: Houses, maisonettes and blocks of up to four flats

This section applies to houses, maisonettes and blocks of up to four flats, which all will have individual waste storage provision. Communal waste storage for developments in this section will not be permitted.

Collection Service Overview

Hertsmere Borough Council currently operates a fortnightly refuse and recycling service to dwellings included in this section.

Each property within this section requires the following containers for waste and recycling:

- 240L wheelie bin for general waste
- 240L wheelie bin for commingled recycling
- 240L wheelie bin for garden waste*
- 23L container for food waste
- 55L for future waste storage provision**

The wheelie bins are supplied on a 'one-bin-per-household' policy. Please refer to Hertsmere Borough Council's Waste Management Service Rules for further details.

A boundary collection service is operated for the dwellings in this section, meaning that wheelie bins and boxes are required to be presented on the boundary between the property and the access road for the collection vehicle on the morning of collection.

Internal Storage

To facilitate the ease of waste disposal and to enable and encourage occupants to recycle, developers should provide adequate internal storage, usually within the kitchen, for the storage and segregation of recyclable material. To ensure maximum recycling is captured at the point of initial disposal, additional, smaller storage areas for recycling are also recommended in other rooms including the living area, bedroom and bathroom.

External Storage

Developers should ensure that there is a sufficient and adequate storage area to the exterior of the property to accommodate all containers. The storage area should be well shaded and away from windows to avoid environmental health concerns.

In order to avoid intrusion on the street scene it is recommended that an appropriate wall, fence, hedge, or other suitably designed, dedicated structure within the boundary of the property be constructed for the storage of the containers.

All collections for properties in this section take place at the boundary of the property. Residents are required to present their wheelie bins and box for collection at the edge of the premises but not directly on the pavement. If the property will include a driveway, adequate provision must be made to enable the presentation of two wheelie bins whilst not limiting the access for vehicles. Adequate provision must also be made for the elderly, disabled and families with young children, such that the premises enables residents to present two wheelie bins on the same day while maintaining sufficient access to the property entrance for a wheelchair user or double-buggy.

In all cases there must be sufficient space for the occupants to easily access both their refuse and recycling bins to deposit waste, and it must be possible for the lids of all bins to be fully opened. There should be clearance of 150mm around and between each bin to enable ease of movement. Each bin should be able to be used and moved without having to move another bin first.

Appropriate access for collection crews must also be included in the design of the outside space. This should involve solid surfaces, with a maximum of 1 step down to the pavement from the bin storage/presentation point (there must be no steps up from this position). The distance from the presentation point to where the collection vehicle can safely stop should be no more than 15m.

If developments of individual houses are located on new access roads, these must be designed in accordance with relevant guidance to allow safe use by waste collection vehicles.

---

*A garden waste collection is available on subscription. Sufficient storage should be made to allow for residents to store this bin if they choose to subscribe.

**An additional 55L for future waste storage has also been included to allow any future changes to Hertsmere Borough Council's waste and recycling collection service to be easily incorporated without limitations arising from insufficient storage areas.

Section 2: Flats with 5 or more individual properties

This section provides information and guidance on waste storage and collection requirements for purpose-built blocks of flats with at least five individual properties, where residents will share communal waste and recycling facilities.

Collection Overview

Hertsmere Borough Council currently operates a fortnightly refuse and recycling service to dwellings included in this section.

Each property within this section requires the following capacity for waste and recycling:

- 240L for general waste
- 240L for commingled recycling
- 23L for food waste*
- 55L for future storage provision**

Garden Waste

For properties in this section any garden space is typically communal and as such the removal of any garden waste will be the responsibility of the contractor. For any properties that do have individual gardens there is a garden waste collection available on subscription and sufficient storage of a 240L wheeled bin should be provided for these properties. The garden waste collection is an individual service only.

Internal Storage

To facilitate the ease of waste disposal and to enable and encourage occupants to recycle, developers should provide adequate internal storage, usually within the kitchen, for the storage and segregation of recyclable material. To ensure maximum recycling is captured at the point of initial disposal, additional, smaller storage areas for recycling are also recommended in other rooms including the living area, bedroom and bathroom.

In properties in this section in particular, consideration should be given to the ease of transportation of waste from the property to the storage area.

External Storage – Capacity

Each individual property in a development within this section is entitled to the capacities listed opposite and the overall capacity is entirely dependent on the total number of properties in a development. As such, the capacity cannot be increased or reduced dependent on either the number of occupants or number of bedrooms in each property.

The containers are available for each waste stream. In the selection of the containers 660L or 1100L containers are preferable rather than wheelie bins for the ease of use and collection.

To calculate the required capacity for the entire development the required capacity for each property will need to be multiplied by the number of units in the scheme. Once the capacity has been calculated then the table in Appendix A can be referred to in order to identify the necessary containers to meet the requirements. If the required capacity is in between two container sizes, the larger size should be selected to account for any unexpected increase in waste.

If the development will consist of multiple storage areas, the same calculation can be made for each by multiplying the required capacity per property by the number of properties served by each store.

*A 140ltr food waste bin is suggested per 6 properties. An optional housing unit is available for this bin.

**An additional 55L for future waste storage has also been included to allow any future changes to Hertsmere Borough Council's waste and recycling collection service to be easily incorporated without limitations arising from insufficient storage areas.

Upon application Hertsmere Borough Council will conduct their own calculations to ensure the requirements have been fully accommodated.

A worked example to demonstrate this calculation has been provided in Appendix B. For further assistance on this calculation please contact Hertsmere Borough Council's Waste Management department.

External Storage – Location

For purpose-built flats it is necessary to provide an appropriate storage area for refuse and recycling containers. These must be an integral part of any new development, with appropriate design, capacity, layout, access and signage. Communal bin storage areas should be clearly identified on plans, and the space allocated to them must be guaranteed for the purposes of waste storage.

Communal bin storage areas must be located within the footprint of the development, and ideally be at ground level. However, if an underground storage solution is planned for standard wheeled bins (such as in a basement car park) then an appropriate collection point for the containers at ground level must be provided and clearly shown on the plans.

Bin storage areas should be easily accessible for the dwellings that they serve, with residents being required to walk no further than 30m from their front door (excluding vertical distances) when carrying refuse and recycling. For larger developments it may be necessary to provide several bin storage areas to ensure an adequate distribution across the site. The location of communal bin storage areas should have regard to the impact of noise and smell on the occupants of neighbouring properties, both existing and proposed.

External Storage – Dimensions

The surface area and dimensions of each container is available in Appendix A. The container storage area(s) within the development must take these dimensions into account in order to ensure all required containers can be put in place and easily manoeuvred when necessary. In order to ensure ease of manoeuvrability, the total surface area of the storage area must be at least twice that occupied by the containers. For example an 1100L container would require a total of 2.4m^2 in floor space: 1.2m^2 occupied by the container and an additional 1.2m^2 for access and manoeuvrability.

There must be a clearance of at least 150mm around and between each container within a storage area and a 2m clearance in front of each container to enable it to be accessed and safely moved without needing to move any other containers.

All containers must be fully accessible from the front face to allow easy depositing of waste and ensure visibility of the container labels.

The doors used for the storage area should have a clear opening, exceeding the width of the widest bin by at least 500mm.

External Storage – Collections

All roads throughout the development which are to be used for waste and recycling collections should be designed in order to facilitate the collection vehicles. The dimensions of the waste collection vehicle and the turning circle can be seen in Appendix C. Specifically, all roads used to access the bin storage area must exceed the width of the vehicle by at least 2m. Ideally on street parking restrictions should apply, however if car parking will be permitted then a further 2m of road width will need to be added. This is to minimise obstructions which may interfere with the collections.

WASTE STORAGE PROVISION REQUIREMENTS FOR NEW RESIDENTIAL DEVELOPMENTS

The bin storage areas must be located within a specified minimum distance of a point where the collection vehicle can safely stop for loading. The maximum distances that operatives should be required to wheel containers, measured from the furthest point within the storage/ collection area to the loading position at the back of the vehicle is 10m.

The surfacing of the route the operatives will take between the bin storage/collection area and the vehicle should have a hard, smooth and continuous finish. The pathway must be free of any ironworks, trees, drainage gulleys or other features which would obstruct or impede the movement of the bins.

The pathway should be free of any steps. If access to a roadway is required along the route then a dropped kerb must be provided as close as possible to the storage area. Slopes should be avoided wherever possible along the pathway, but where needed the gradient should fall away from the bin storage area and should be no greater than 1:12. It is not acceptable for the route between the storage area and the collection vehicle (i.e. in the direction that filled bins will be pulled) to have any uphill gradients. Signage and, if appropriate, road/pavement markings should be used to indicate that the storage areas are not to be blocked at any time.

The doors used for the bin storage area must be able to be secured in an open position for the duration of collection for the purposes of health and safety of our collection operatives. Spring operated doors will not be accepted as part of the application.

External Storage – Design Features

Bin storage areas should be contained within a suitable enclosure to prevent nuisance from the spread of waste, odour or noise. The walls should be constructed of materials that are non-combustible, impervious, easy to keep clean, and able to withstand impacts from fully-loaded Eurobins being moved. Where necessary, the installation of a suitable buffer can prevent contact between the bins and the inside faces of the walls. It is also recommended that any switches, plugs or other similar installations are placed above or well below the height of the rim of the bins.

The external faces of the enclosure walls should be constructed or clad in material that is in keeping with the visual style of the surroundings. It is recommended that the use of appropriate screening or soft landscaping is considered to make bin storage areas more aesthetically pleasing.

The enclosures must be suitably designed to prevent entry by vermin. Where a roof is being placed over the bin storage area or it is located indoors, the enclosed space must be well ventilated. The roof must be constructed of non-combustible, robust, secure and impervious material.

There should be adequate lighting in the bin storage area. This lighting should involve sealed bulkhead fittings for the purpose of cleaning down with hoses. Switching should be either through a proximity detection system or on a time delay button to prevent lights being left on. This lighting should be easy to maintain by local site staff without the need for specialist parts.

The use of doors or gates can help to reduce the potentially detrimental visual impact of a bin storage area, and can also enable site manager to reduce the risk of bin theft or vandalism. Such doors must not open outward over a public footway or road, and should not cause an obstruction to other access when in an open position. They should be able to remain or be secured in the open position so that access for collection staff is unimpeded when the bins are being emptied.

Interior walls and doors of bin enclosures should be fitted with a protective steel bumper or sacrificial strip, fixed at the same height as the widest part of the bins to ensure walls, doors and doorframes are protected.

The thresholds of any doors or gates must be free of rims or impediments at floor level.

Where these are part of the design of standard door units being installed, developers must apply graded resin strips or other appropriate features on either side to minimise any impediment to the movement of the bins. Floor-level thresholds must also be very securely fixed down to prevent rising, warping or other such issues.

There must be a water supply with standard tap fittings available to the bin storage area to enable washing down of the bins, walls and floor.

Bin storage areas must have a suitable impermeable hard standing ground covering which can be cleaned easily. The slope of the floor must enable it to drain properly and completely. The drainage system must be suitable for receiving a polluted effluent. Any gullies must not be in the track of the container wheels.

The design of bin storage areas should pay as much regard as possible to accessibility for disabled or elderly residents. Where the bin storage areas cannot be designed to meet the requirements of these residents, suitable alternative arrangements should be put in place by the site managers to support any tenants who are unable to use the external waste storage facilities provided.

Storage areas for refuse and recycling bins should be clearly identifiable as such, through the use of appropriate signage on doors or walls. Hertsmere Borough Council should be consulted in the design of these signs to ensure information is accurate, consistent and presented appropriately, particularly with regards to the waste and recycling services offered in the borough. The use of 'Recycle Now' iconography is recommended for recycling signage.

Section 3: Commercial premises

This section applies to all trade and business premises. These premises are not required to have their waste collected by Hertsmere but may benefit from guidance on what is required for waste storage.

Collection overview

Hertsmere Borough Council currently offer a refuse only collection contract for commercial premises. Bins are collected on a weekly basis (multiple collections per week if required.)

The development must have sufficient bin storage space (including refuse, recycling and any specialist waste streams) for the likely waste needs of the use class being applied for. For example B1 offices suggested storage space is 1 x1100ltr euro bin per 500m2 of floor space.

Depending on the frequency of the collection and size of the business the following containers are available:

- 240L
- 660L
- 1100L

Internal storage

To facilitate the ease of waste disposal and to enable and encourage staff to recycle, developers should provide adequate internal storage in the office/work area to include the capture of both refuse and recycling.

Bin storage areas should be easily accessible for the premises that they serve, with staff being required to walk no further than 10m when carrying refuse and recycling. For larger developments it may be necessary to provide several bin storage areas to ensure an adequate distribution across the site.

The design of developments must ensure that waste will not be taken through a building (other than a loading bay or non-habitable area) to get from a bin storage area to a waste collection point.

External storage

Bin storage areas should be contained within a suitable enclosure to prevent nuisance from the spread of waste, odour or noise. Interior walls and doors of bin enclosures should be fitted with a protective steel bumper or sacrificial strip, fixed at the same height as the widest part of the bins to ensure walls, doors and doorframes are protected. The walls should be constructed of materials that are non-combustible, impervious, easy to keep clean, and able to withstand impacts from fully loaded Eurobins being moved. It is also recommended that any switches, plugs or other similar installations are placed above or well below the height of the rim of the bins.

The external faces of the enclosure walls should be constructed or clad in material that is in keeping with the visual style of the surroundings. It is recommended that the use of appropriate screening or soft landscaping is considered to make bin storage areas more aesthetically pleasing.

There must be a clearance of at least 150mm around and between each container within a storage area and a 2m clearance in front of each container to enable it to be accessed and safely moved without needing to move any other containers.

The doors used for the storage area should have a clear opening, exceeding the width of the widest bin by at least 500mm. Doors must not open outward over a public footway or road, and should not cause an obstruction to other access when in an open position. They should be able to remain or be secured in the open position so that access for collection staff is unimpeded when the bins are being emptied.

There must be a water supply with standard tap fittings available to the bin storage area to enable washing down of the bins, walls and floor.

Bin storage areas must have a suitable impermeable hard standing ground covering which can be cleaned easily. The slope of the floor must enable it to drain properly and completely. The drainage system must be suitable for receiving a polluted effluent. Any gullies must not be in the track of the container wheels.

Vehicle Access

Vehicles used to collect waste and recycling will be amongst the largest and heaviest needing to access any development. For further information about the dimensions and other specifications of waste collection vehicles used by Hertsmere Borough Council, please see Appendix C. Developers should be aware that other private contractors undertaking collections of commercial waste from developments may use larger vehicles.

In order to ensure that all refuse and recycling collections can take place unimpeded and without the risk of any damage to the vehicles, paving or other fabric of the sites, developers must ensure that access roads and driveways meet the following requirements.

Roadway Strength

Roads should have foundations and a hard-wearing surface capable of withstanding a fully laden waste collection vehicle of 26 tonnes gross vehicle weight, with a maximum axle weight of 11.5 tonnes. Any ironworks situated in the roadways should also be capable of withstanding the loads indicated.

Roadway Layout

Roads should have a minimum width of 5m. Pinch points, such as archways or gates, should give a minimum clearance of 3.7m width, and additional allowances must be given if vehicles are required to approach from an angle.

Any part of a building through which a waste collection vehicle passes must have a minimum clear height of 4.5m, to allow for overhead fixtures and fittings.

If a turning space is necessary, the road layout should permit a turning circle of 25m kerb to- kerb, or 28m wall-to-wall.

Any locations where the gradient of the roadway changes must be designed to allow for the overhang of the lifting equipment at the back of waste collection vehicles.

Manoeuvring

Waste collection vehicles should be able to enter, travel around the site and exit the site without the need to

reverse. Where this is not possible, collection vehicles must not be required to reverse a distance greater than 12m. Waste collections vehicles should never be required to reverse up or down or curb, slope or ramp.

Where possible, developers should design road layouts so that waste collection vehicles are not required to reverse in from or out onto the public highway.

Vehicles undertaking collections should be able to stop for loading in a safe and legal position where they will not obstruct other traffic, pedestrians or access. Appropriate measures must be incorporated into road layouts to control unauthorised parking of vehicles that would prevent access by the waste collection vehicles and staff. Developers should ensure that sufficient car parking is provided in order to prevent such problems.

Permitted Access

Access to storage areas must be possible between 06:00 to 17:00, Monday to Friday (or Monday to Saturday if on a week including a bank holiday).

All points of access to be used by the collection operatives, including but not limited to site entrances and bin storage areas must be accessible without the use of a key or fob. If a keypad and code is to be used for gaining access, then developers and site managers should be aware that the code will be shared with a number of collection staff, and all arrangements must be agreed with Hertsmere Borough Council prior to installation. If keys are fobs are used then arrangements will need to be made by the property manager to ensure they are left unlocked from 6am on the morning of the collection.

Alternative Waste Management Technologies

For larger developments, particularly those comprising buildings of several storeys, the generation of waste may have a significant impact on the local environment.

Hertsmere Borough Council strongly recommends that alternative waste technologies are investigated for all new large-scale developments. There are a number of existing and proposed technology options for managing and treating waste on site. Developers are encouraged to ensure that all appropriate options have been investigated, and should also consider the potential of trial projects as a means of attracting external funding to assist with initial capital costs. All on-site thermal treatment technologies will be subject to appropriate regulations and will require suitable environmental permits.

FURTHER INFORMATION AND ADVICE

For further information and advice please contact Hertsmere Borough Council's Planning and Economic Development Service.

Hertsmere Borough Council
Civic Offices
Elstree Way
Borehamwood
Hertfordshire
WD6 1WA
Tel: 020 8207 2277
Email: planning@hertsmere.gov.uk

Appendix A

Available containers and dimensions

Surface area = 1.2m²

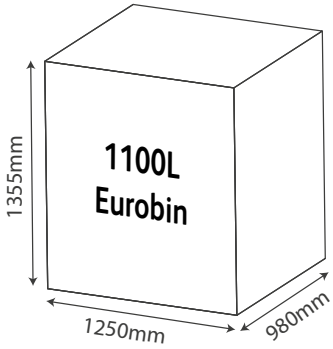

Surface area = 0.9m²

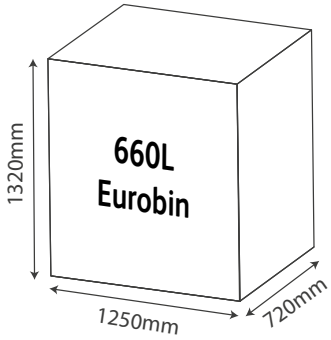

Surface area = 0.5m²

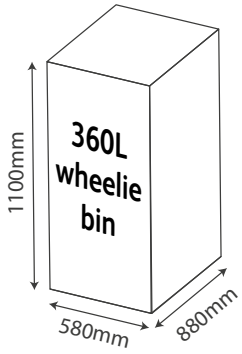

Surface area = 0.4m²

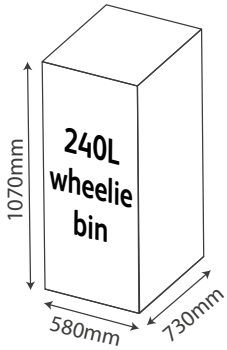

Surface area = 0.3m²

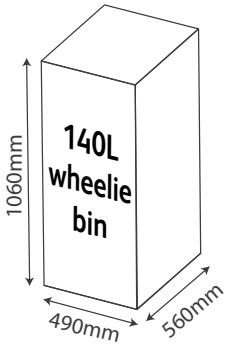

	Available bin capacity					
	1100L Eurobin	660L Eurobin	360L wheelie bin	240L wheelie bin	140L wheelie bin	23L container
General waste	✓	✓	✓	✓		
Commingled recycling	✓	✓	✓	✓		
Garden waste				✓		
Food waste				✓	✓	✓

Appendix B

Worked example for calculating container requirements

The example below is calculated based on a development of 20 flats. Unless the flats have individual gardens, a garden waste bin is not required.

	Required capacity	Containers to meet required capacity	Total capacity
General waste	4800L (20 x 240)	4 x 1100L 2 x 240L	4880L
Commingled recycling	4800L (20 x 240)	4 x 1100L 2 x 240L	4880L
Food waste	460L (20 x 23)	3 x 140L	420L
Future waste storage provision	1100L (20 x 55)	1 x 1100L	1100L
Total	**11160L**	**4 x 240L** **3 x 140L**	**11280L**

Appendix C

Vehicle dimensions and turning circle (requirements for vehicle access)

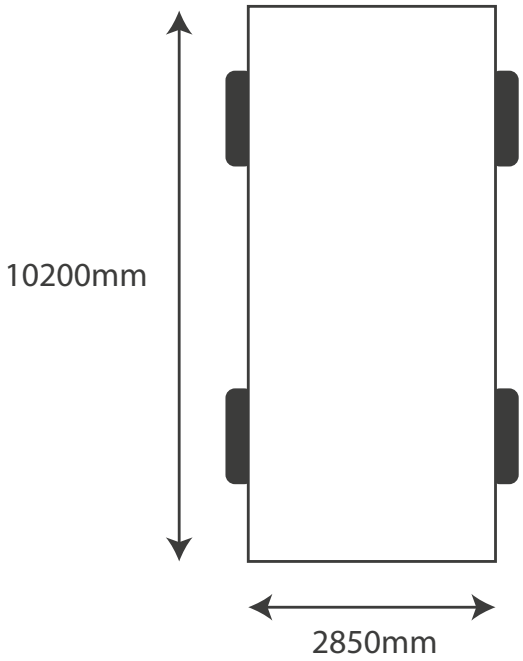

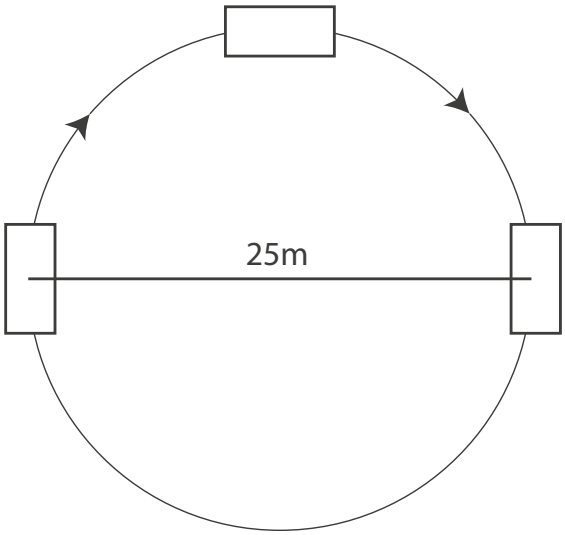

Appendix D

Terms and Conditions for the purchase of containers

1.1 The developer of the property is responsible for the purchase of all waste and recycling containers in the first instance.

1.2 For the purposes of safety and adherence with regulations, only containers purchased from Hertsmere Borough Council will be collected.

1.3 The number of containers required at any development must be agreed between the developer and Hertsmere Borough Council's Waste Management department and this quantity of containers must be purchased. No additional and no fewer containers may be purchased. Please note that at the point of purchase, checks will be made to ensure the quantity of containers agreed upon the application approval matches the quantity on the order.

1.4 Hertsmere Borough Council will only offer refunds for containers that are unused. Once used a bin can no longer be refunded.

1.5 Following the purchase of the bins and occupancy of the dwelling, the containers become the responsibility of the home/landowner.

1.6 Bins may only be used for collections by Hertsmere Borough Council. Any private collections/contractors used must supply their own containers. Hertsmere Borough Council reserves the right to remove bins from site where this is found not to be the case.

1.7 In the event of damage to a container caused by an employee of Hertsmere Borough Council during collections a replacement container will be supplied free of charge. In this case the damaged bin on site will be removed and either repaired or recycled.

1.8 In the event of damage to a container not caused by an employee of Hertsmere Borough Council a replacement must be purchased from the authority.

1.9 In the event of the loss of a container a replacement must be purchased from Hertsmere Borough Council. If the missing container is later recovered then we will continue to collect only one container per property and the resident can contact the council to arrange removal of one container.